Earth Observing System Data and Information System (EOSDIS) Test System (ETS) Functional and Performance Requirements

March 1996

Prepared Under Contract NAS5-31500
Task Assignment 16 507
By Computer Sciences Corporation
CSC/TR-94/6084

Prepared by:

J. McGarry Date
Task Leader, CSC

ETS Project Approval:

W. Fuller, ETS Project Manager Date
GSFC, Code 515.1

Reviewed by:

M. Heffernan Date
Manager, Simulation Systems Department, CSC

510 Division CCB Approval:

J. Hennessy, Chairman Date
GSFC, Code 510 CCB

Quality Assured by:

J. Wood Date
Manager, Product Assurance Office, CSC

ESDIS Systems Management Office Approval:

D. Lakins, ESDIS ETS Manager Date
GSFC, Code 505

Approved by:

J. Lang Date
Manager, Generic Applications Group, CSC

ESDIS CCB Approval:

D. Harris, Chairman Date
GSFC, Code 505 CCB

Test Systems Branch
Goddard Space Flight Center
Greenbelt, Maryland

CCB APPROVAL

Preface

This version of the Earth Observing System Data and Information System (EOSDIS) Test System (ETS) Functional and Performance Requirements (F&PR) document is an update to the previous version (Version 4), published in May 1995. Version 3 was signed by cognizant personnel from Codes 505, 515, and 521; however, Version 4 and previous versions were never baselined by a Configuration Control Board.

This new version reflects the ETS understanding of recent changes in the EOSDIS and the role that ETS will play in providing test and simulation tools to support EOSDIS ground system testing.

Abstract

The Earth Observing System Data and Information System (EOSDIS) Test System (ETS) provides test capabilities for the ground system supporting Earth Observing System (EOS) spacecraft that conform to the Consultative Committee for Space Data Systems (CCSDS) Recommendations. ETS is designed to simulate and test EOSDIS ground data systems and element interfaces. The simulation and testing capabilities cover only level-zero processing up to data delivery to the Distributed Active Archive Centers (DAACs).

This document specifies the F&PR for the ETS. It includes a system overview, a list of references, specific requirements grouped by functional area, a requirements/source traceability matrix, an acronym list, and a glossary of terms.

Keywords*: Earth Observing System Data and Information System (EOSDIS), EOSDIS Backbone network (EBnet), EOSDIS Test System (ETS), requirement*

Change Information Page

List of Effective Pages	
Page Number	**Issue**
Title page	Original
iii through xi	Original
1-1 through 1-6	Original
2-1	Original
3-1 through 3-10	Original
4-1 through 4-2	Original
5-1 through 5-4	Original
A-1 through A-7	Original
AB-1 through AB-3	Original
GL-1 through GL-6	Original

Document History			
Document Number	**Status/Issue**	**Publication Date**	**CCR Number**
515-4FRD/0294 CSC/TR-94/6084	Original	March 1996	N/A

Contents

Preface

Abstract

Section 1. Introduction

1.1 Purpose 1-1

1.2 ETS Background 1-1

1.3 Document Organization 1-1

1.4 Document Conventions 1-1

1.5 Maintenance of This Document 1-2

1.6 ETS Overview 1-2

1.6.1 ETS Scope 1-2

1.6.2 Test Capabilities 1-2

1.6.3 Operations Overview 1-5

Section 2. Documentation

Section 3. ETS Functional Requirements

3.1 ETS System-Level Requirements 3-1

3.2 ETS Simulating High-Rate TGT Return-Link Requirements 3-2

3.3 ETS Simulating EDOS Output Requirements 3-2

3.4 ETS Simulating DAAC Front-End Requirements 3-2

3.5 ETS Spacecraft Simulation Requirements for TGT and Contingency-Mode Operations 3-6

3.6 ETS Requirements for Spacecraft Interface With EOC 3-8

Section 4. ETS Facility and Interface Requirements

4.1 ETS Facility Requirements.....4-1

4.2 ETS Simulating Spacecraft/TGT Interface to EDOS.....4-1

4.3 ETS Simulating DSN Interface to EDOS Through EBnet 4-1

4.4 ETS Simulating GN Interface to EDOS Through EBnet 4-1

4.5 ETS Simulating WOTS Interface to EDOS Through EBnet.....4-1

4.6 ETS Simulating EDOS Interface to EOC.....4-1

4.7 ETS Supporting Interface Between EOC and SCITF/SSIM 4-2

4.8 ETS Simulating Interface Between EDOS and DAAC 4-2

4.9 ETS-EBnet Interface Requirements 4-2

Section 5. ETS Performance Requirements

5.1 ETS System-Level Performance Requirements.....5-1

5.2 ETS Performance Requirements for Simulating High-Rate TGT Return Link.....5-1

5.3 ETS Performance Requirements for Simulating EDOS Output.....5-2

5.4 ETS Performance Requirements for Simulating DAAC Front End 5-2

5.5 ETS Performance Requirements for Simulating TGT and Contingency Mode 5-2

5.6 ETS Performance Requirements for Spacecraft Interface With EOC.....5-3

Figures

1-1 EOSDIS Interfaces Simulated by ETS 1-3

1-2 ETS Functional Diagram.....1-4

1-3 ETS Operations Phases.....1-6

3-1 High-Rate TGT Return-Link Simulation 3-3

3-2 EDOS Output Product Simulation 3-4

3-3 DAAC Front-End Simulation.....3-5

3-4 Spacecraft and Ground Station Simulation.....3-7

3-5 EDOS Low-Rate Simulation.....3-9

Appendix A. ETS Requirements/Source Traceability Matrix

Abbreviations and Acronyms

Glossary

Section 1. Introduction

1.1 Purpose

This document states the highest level functional and performance requirements (F&PR) for the Earth Observing System (EOS) Data and Information System (EOSDIS) Test System (ETS) and constitutes ETS level-3 requirements. These requirements will be used as the baseline to develop the detailed ETS specifications.

ETS will be used to support mission-readiness activities and to verify the processing of ground data systems supporting the EOS mission during the 1990s and beyond. ETS can be used to simulate and/or test EOSDIS elements involved in data processing (up to and including level-zero processing) and data transport.

1.2 ETS Background

ETS is a test system being developed for the Earth Science Data and Information System (ESDIS) Project by Code 515.2, Simulations Operations Section, in conjunction with Code 521, the Microelectronic Systems Branch, which is providing much of the hardware technology being used in ETS. ETS provides testing capabilities for ground systems supporting EOS spacecraft that adhere to recommendations established by the Consultative Committee for Space Data Systems (CCSDS).

1.3 Document Organization

This document comprises five sections and one appendix. Section 1 contains the document introduction and an overview of the ETS. It presents a brief summary of the ETS scope, testing capabilities, and operations approach. Section 2 lists the documents used in compiling the ETS requirements. Section 3 contains the ETS functional requirements at the general system level and for each test configuration level. Section 4 contains the ETS facility and interface requirements. Section 5 contains the ETS system-level performance requirements and the ETS performance requirements for each test configuration. Appendix A is an ETS requirements/source traceability matrix. This document also contains a list of abbreviations and acronyms and a glossary.

1.4 Document Conventions

Throughout this document, the term *element* refers to EOSDIS entities or facilities. Examples include but are not limited to the EOS Data and Operations System (EDOS), EOSDIS Backbone Network (EBnet) [formerly EOS Communications (Ecom)], the EOS Operations Center (EOC), and Distributed Active Archive Centers (DAACs).

In this document, the acronym *VCDU* refers to both the virtual channel data unit data structure and the coded VCDU (CVCDU) data structure, both of which are defined in Reference 1. When a requirement applies only to the CVCDU data structure, the acronym CVCDU is used. Any requirement stated for VCDUs shall apply to both VCDUs and CVCDUs.

1.5 Maintenance of This Document

This ETS F&PR document, once approved, will conform to ESDIS guidelines for configuration control. Required changes in the document thereafter will be made through the issuance of formal Document Change Notice (DCN) pages.

1.6 ETS Overview

The subsections that follow provide an overview of ETS. More detailed information about the system is contained in the ETS operations concept document (Reference 2).

1.6.1 ETS Scope

The ETS provides testing capabilities for the ground system supporting EOS spacecraft, which are Advanced Orbiting Systems (AOS) spacecraft that conform to recommendations established by the Consultative Committee for Space Data Systems (CCSDS). Figure 1-1 depicts the EOS Ground System and the interfaces ETS will be simulating. Although the ETS will be designed to support the AM-1 spacecraft, it is extensible to other EOS spacecraft. In general, ETS

- Generates input and output products that interface with one or more EOSDIS elements
- Provides for appropriate data flow (i.e., ETS transmission and reception) for these products among EOSDIS elements in a given test
- Provides sufficient summary quality and accounting statistics on data transmitted and received for test teams to assess performance of the element under test and to determine correctness and completeness of the element's generated data products

1.6.2 Test Capabilities

ETS will be used to generate test data according to specifications provided by EOS test teams. Figure 1-2 is a high-level ETS functional diagram. ETS will generate EOS return- and forward-link data, conforming to CCSDS recommendations and applicable International Standards Organization (ISO)/Government Open Systems Interconnection Profile (GOSIP)/Internet Protocol (IP) or National Aeronautics and Space Administration (NASA) Communications (Nascom) communications standards. ETS will have the capability to generate simulated data for the AM-1 spacecraft.

ETS will provide dynamic data as well as static data. Dynamic data patterns change as a predictable and repeatable response to some received input. ETS can incorporate user-provided data sets. The created data sets can be stored and reused during subsequent testing sessions with the element, to ensure test repeatability and to minimize data-preparation time.

ETS will provide the element(s) under test with the requested data sets at the user-specified data rates. ETS can transmit test data at all EOS nominal data rates. In addition to generating valid data, ETS will have a wide range of error-injection capabilities to verify the error processing of

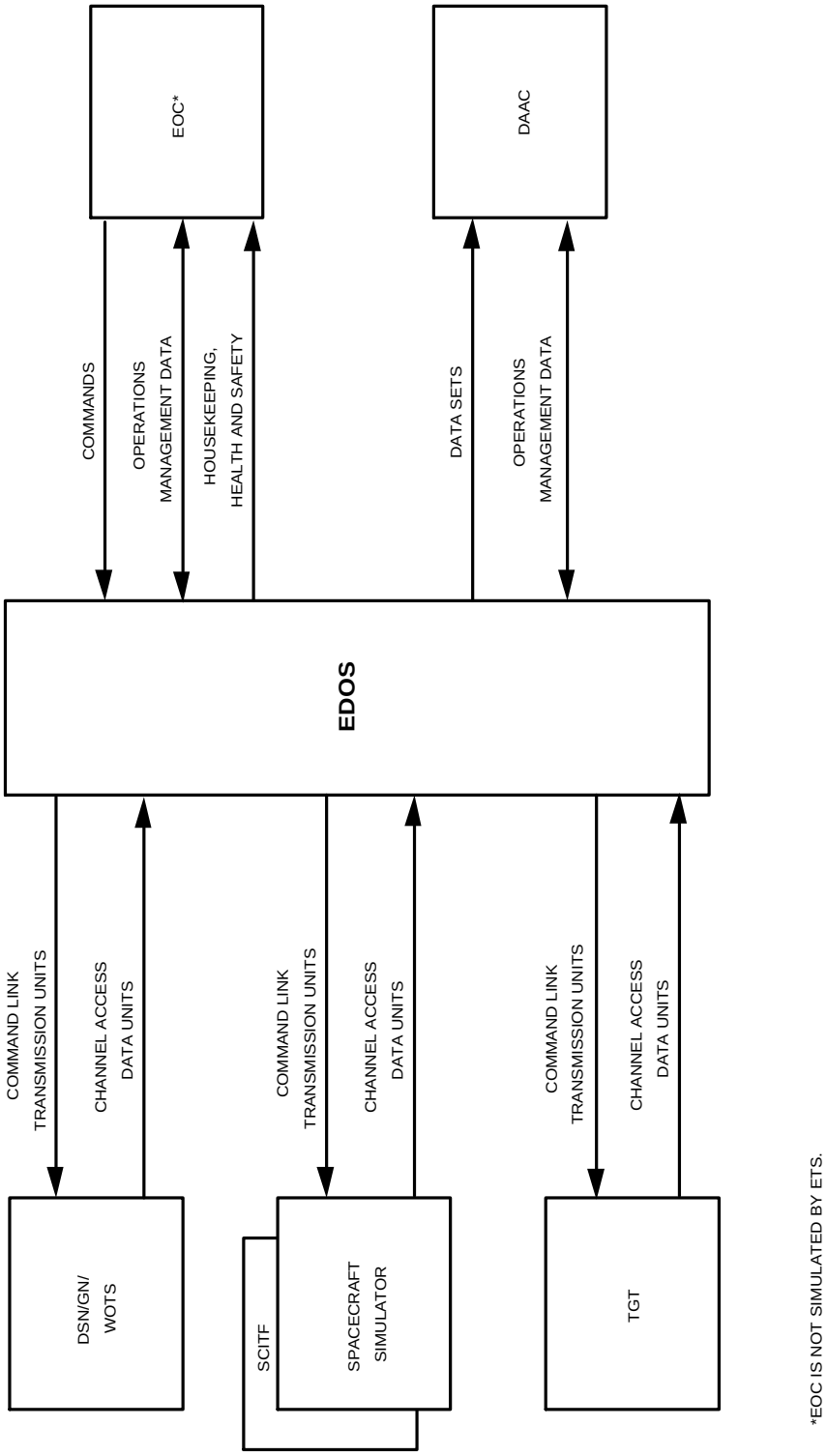

Figure 1-1. EOSDIS Interfaces Simulated by ETS

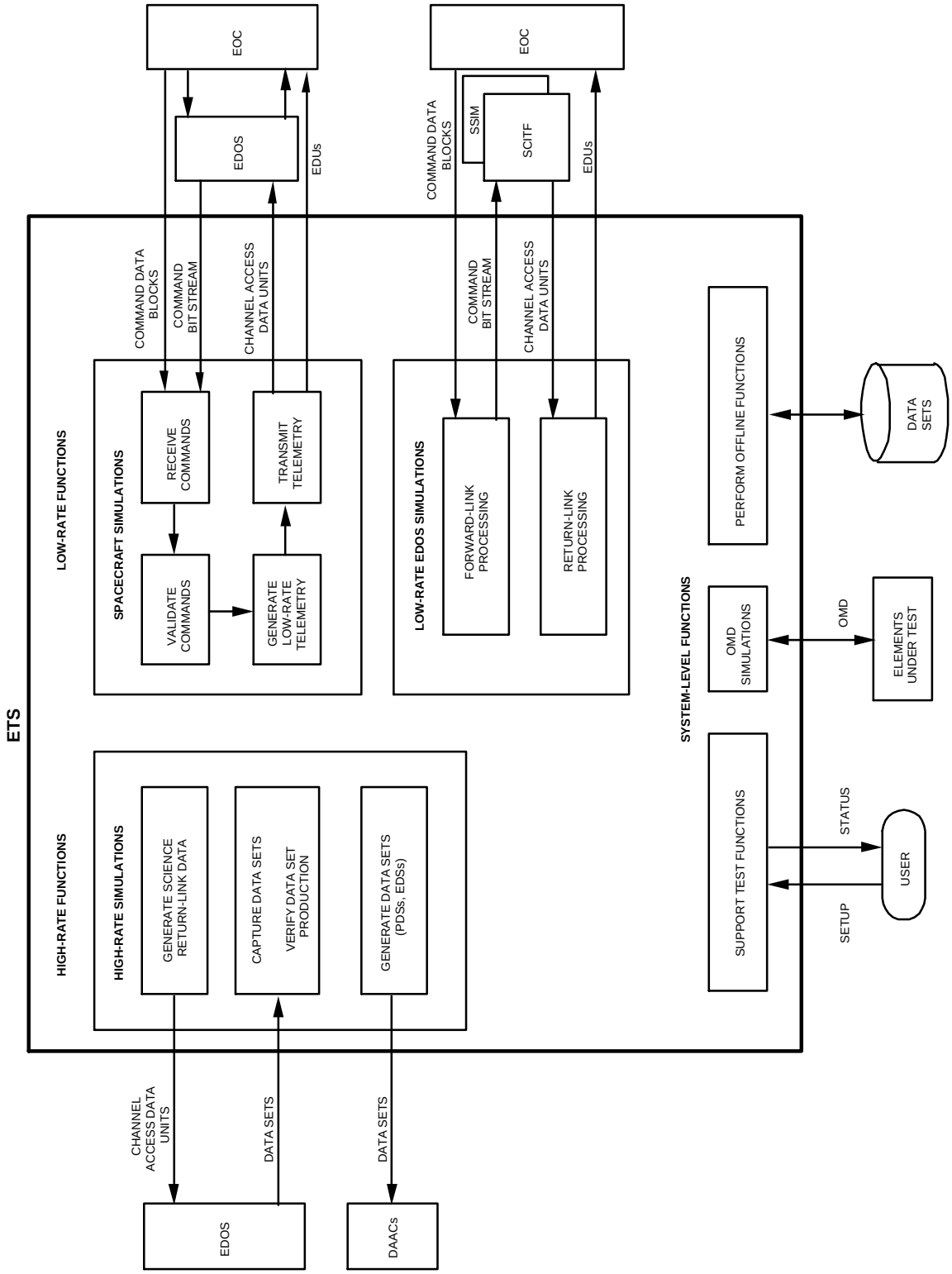

Figure 1-2. ETS Functional Diagram

the system under test. Error conditions could include non-EOS-formatted data, sequence counter discontinuities, Reed-Solomon coding errors, and packet fragments interleaved with complete packets.

Data received by ETS during a test session will be stored. For elements that receive and process ETS-generated data, ETS will receive their processed data and verify that the data products match the expected results. ETS will provide data quality, accounting, and performance monitoring capabilities. Test results will be used to prepare test reports.

1.6.3 Operations Overview

To provide a cost-effective test tool for the ESDIS Project, the planned ETS approach is based on performing many of the testing-related tasks before and immediately after the actual test when it is possible to do so. Figure 1-3 shows an overview of the ETS operations phases. To use ETS, EOS test teams will develop test scripts specifying the type of data needed, application process identifiers (APIDs) to use, test duration, data rates, and desired error information. The test teams will generate the test data, verify the generated data, and store the test data. If the particular test script requires the element under test to process the ETS-generated data and produce an output, then ETS will also generate and store a corresponding set of expected output data. Otherwise, ETS will simply provide a source of test data to the element under test.

The scheduling of ETS will have to take into account high-rate data generation in the pretest phase as well as testing during the test phase. Because the production of some high-rate data sets is resource intensive, it is recommended that it be done standalone, that is, not concurrent with a test. Once the data has been prepared, however, the same test data may be reused at the same or different data rates. During the test preparation phase, ETS may be used to perform a verification test on that data.

During the scheduled test, ETS will transmit the real-time generated data or the prepared data at the requested rates. Data that ETS receives from the element under test will be stored and compared to the expected data. Other requested data quality checks or performance measurements will also be made. Test results will be provided to the test team for analysis.

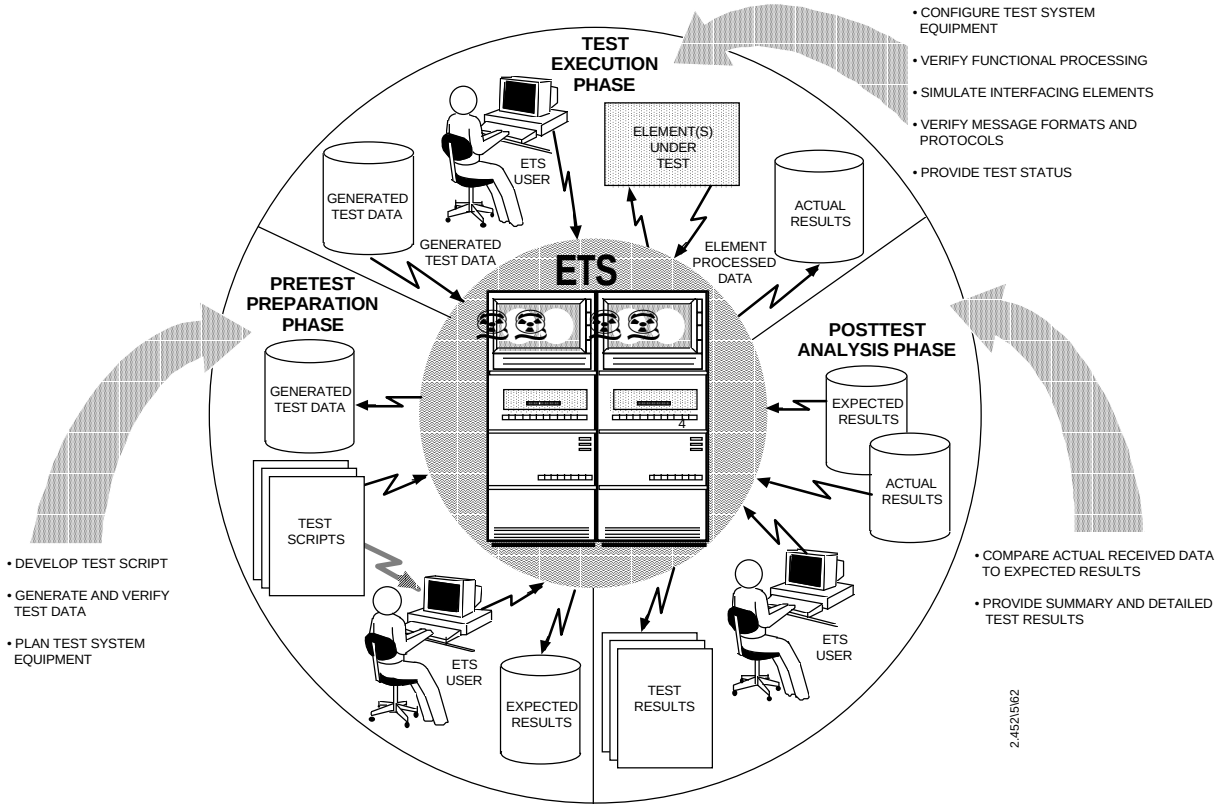

Figure 1-3. ETS Operations Phases

Section 2. Documentation

The following reference documents provide background and general information:

1. Consultative Committee for Space Data Systems, CCSDS 701.0-B-2, *Recommendation for Space Data System Standards; Advanced Orbiting Systems (AOS), Networks and Data Links: Architectural Specification*, Blue Book, November 1992

2. National Aeronautics and Space Administration, Goddard Space Flight Center (GSFC), 515-3OCD/0194 (CSC/TR-94/6085), *Earth Observing System Data and Information System (EOSDIS) Test System (ETS) Operations Concept*, May 1995

3. --, *Automated Information System (AIS) Security Policy*, August 1990

4. --, Mission Operations and Data Systems Directorate (MO&DSD), 541-107 (CSC/SD-90/6059*), NASA Communications (Nascom) Access Protection Policy and Guidelines*, August 1995

5. --, 423-10-01-3, *Earth Science Data and Information System (ESDIS) Project Level 2 Requirements Volume 3: Other ESDIS Project Requirements*, October 1995

6. --, MO&DSD, 560-EDOS-0202.0004, *EDOS Functional and Performance Specification*, November 23, 1992

7. CCSDS, CCSDS 101.0-B-3, *Recommendation for Space Data System Standards; Telemetry Channel Coding*, Blue Book, May 1992

8. --, CCSDS 102.0-B-3, *Recommendation for Space Data System Standards; Packet Telemetry*, Blue Book, November 1992

9. --, CCSDS 201.0-B-1, *Recommendation for Space Data System Standards; Telecommand, Part 1: Channel Service, Architectural Specification*, Blue Book, January 1987

10. --, CCSDS 202.0-B-2, *Recommendation for Space Data System Standards; Telecommand, Part 2: Data Routing Service, Architectural Specification*, Blue Book, November 1992

11. --, CCSDS 202.1-B-1, *Recommendation for Space Data System Standards; Telecommand, Part 2.1: Command Operation Procedures*, Blue Book, October 1991

12. --, CCSDS 203.0-B-1, *Recommendation for Space Data System Standards; Telecommand, Part 3: Data Management Service, Architectural Definition*, Blue Book, January 1987

13. --, CCSDS 301.0-B-2, *Recommendation for Space Data System Standards; Time Code Formats*, Blue Book, April 1990.

Section 3. ETS Functional Requirements

This section contains the functional requirements for ETS.

3.1 ETS System-Level Requirements

This subsection contains the overall system-level requirements for ETS.

3.1.1 ETS shall conform to the CCSDS Recommendations for Space Data System Standards applicable to the ESDIS Project as specified in this document.

3.1.2 ETS shall provide the capability to accept and distribute test data by electronic transmission and by physical media.

3.1.3 ETS shall provide sensitivity level 1 protection as specified in the MO&DSD *Automated Information System (AIS) Security Policy* (Reference 3).

3.1.4 ETS shall comply with *the NASA Communications (Nascom) Access Protection Policy and Guidelines* (Reference 4).

3.1.5 ETS shall provide the capability to generate flags in all headers.

3.1.6 ETS shall provide the capability to read and interpret flags in all headers.

3.1.7 ETS shall provide the capability to validate all headers of received data.

3.1.8 ETS shall provide the capability to generate static test data, dynamic test data, or a combination of both.

3.1.9 ETS shall provide the capability to generate CCSDS test data with predefined errors in selected header and data fields.

3.1.10 ETS shall provide the capability to create time and data gaps in the ETS-generated test data.

3.1.11 ETS shall provide the capability to insert fill data into ETS-generated test data.

3.1.12 ETS shall provide the capability to monitor and display ETS system configuration and test status.

3.1.13 ETS shall be capable of providing dumps of received or generated test data on electronic and physical media.

3.1.14 ETS shall provide the capability to generate unique APIDs or VCDU identifiers (VCDU-IDs) for a testing session.

3.1.15 ETS shall use the universal time coordinated (UTC) format for time-of-day-related data, as required by the test.

3.1.16 ETS shall provide the capability to log operator dialog to maintain an operations audit trail, as specified in the test script.

3.1.17 ETS shall provide tools to support data analysis.

3.1.18 ETS shall provide the capability to receive, store, and utilize the AM-1 spacecraft database.

3.1.19 ETS shall provide the capability to insert errors into data from spacecraft- and instrument-generated tapes.

3.1.20 ETS shall provide the capability to generate production data sets (PDSs) and expedited data sets (EDSs) from spacecraft- and instrument-generated tapes.

3.1.21 ETS shall provide the capability to generate and transmit OMD through EBnet.

3.1.22 ETS shall provide the capability to receive OMD through EBnet.

3.1.23 ETS shall provide the capability to store transmitted and received test data, as directed by operator control.

3.1.24 ETS shall provide the capability to encapsulate user-provided AM-1 science packets and raw sensor data in CCSDS channel access data units (CADUs) for transmission.

3.2 ETS Simulating High-Rate TGT Return-Link Requirements

This subsection contains the requirements for ETS providing the high-rate Tracking and Data Relay Satellite System (TDRSS) Ground Terminal (TGT) return link during tests. Figure 3-1 depicts the ETS data flow between the TGT and EDOS when ETS is simulating the TGT. This figure is intended only as an aid for the reader.

3.2.1 ETS shall provide the capability to generate and transmit a TGT high-rate return link in the form of CADUs.

3.2.2 ETS shall provide the capability to generate and transmit the TGT return-link clock.

3.3 ETS Simulating EDOS Output Requirements

This subsection contains the requirements for ETS acting as the EDOS during tests. Figure 3-2 depicts the ETS data flow between the EDOS and the DAACs when ETS is simulating the EDOS. The figure is intended only as an aid for the reader.

3.3.1 ETS shall provide the capability to generate and transmit PDSs using ETS-generated test data.

3.3.2 ETS shall provide the capability to generate and transmit EDSs using ETS-generated test data.

3.3.3 ETS shall provide the capability to generate the summary status, quality, and accounting data reporting of EDOS services for processing of ETS-generated data.

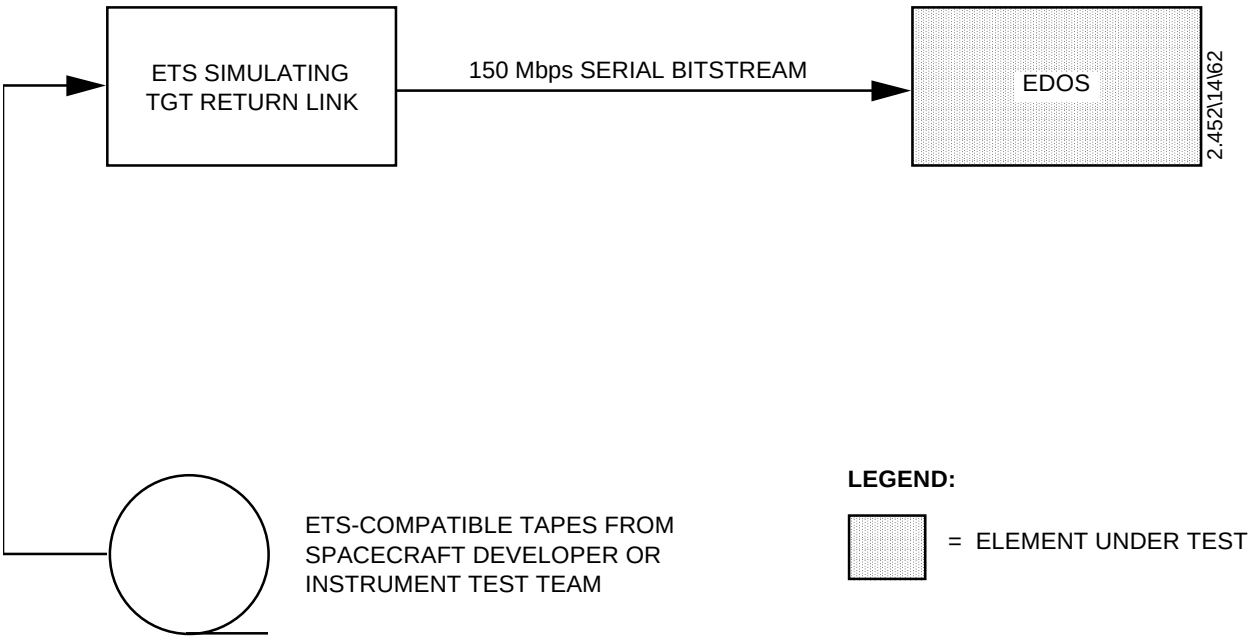

Figure 3-1. High-Rate TGT Return-Link Simulation

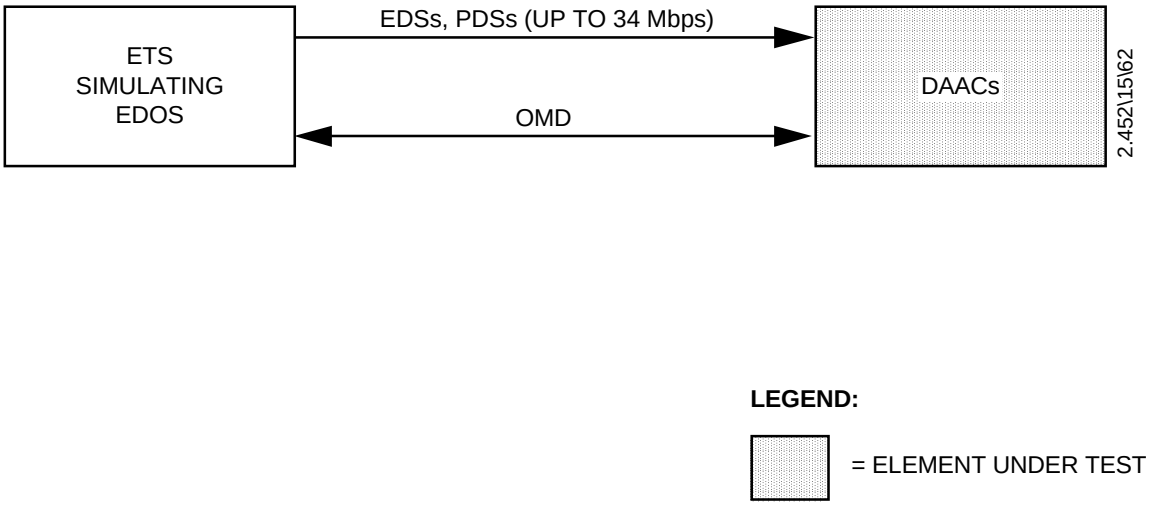

Figure 3-2. EDOS Output Product Simulation

3.4 ETS Simulating DAAC Front-End Requirements

This subsection contains the requirements for ETS acting as a DAAC during tests. Figure 3-3 depicts the ETS data flow between the DAAC and EDOS when ETS is simulating the DAAC. The figure is intended only as an aid for the reader.

3.4.1 ETS shall provide the capability to receive PDSs through EBnet.

3.4.2 ETS shall provide the capability to receive EDSs through EBnet.

3.4.3 ETS shall provide the capability to store received EDSs and PDSs.

3.5 ETS Spacecraft Simulation Requirements for TGT and Contingency-Mode Operations

This subsection contains the requirements for ETS acting in one of two modes:

- As the spacecraft and a ground station [TGT, Deep Space Network (DSN), Ground Network (GN), or Wallops Orbital Tracking Station (WOTS)]
- As the spacecraft, a ground station, and EDOS

Figure 3-4 depicts the interfaces for these two modes. This figure is intended only as an aid for the reader.

3.5.1 ETS shall provide the capability to simulate EOS AM-1 low-rate spacecraft return-link data.

3.5.2 ETS shall provide the capability to generate simulated time codes in the packet headers.

3.5.3 ETS shall provide the capability to generate user-specified VCDU packet data values.

3.5.4 ETS shall provide the capability to receive EOS spacecraft command bit stream.

3.5.5 ETS shall provide the capability to verify the received EOS spacecraft commands by updating the command link control word (CLCW) based on the receipt of a valid command.

3.5.6 ETS shall provide the capability to transmit the CLCW in the form of EDOS data units (EDUs) to EOC through EBnet.

3.5.7 ETS shall provide the capability to perform the Command Operations Procedures (COP-1) protocol for commands over the low-rate return link.

3.5.8 ETS shall provide the capability to respond to a limited number of EOS spacecraft commands.

3.5.9 ETS shall provide the capability to generate the DSN return-link CADUs in the form of 4800-bit blocks.

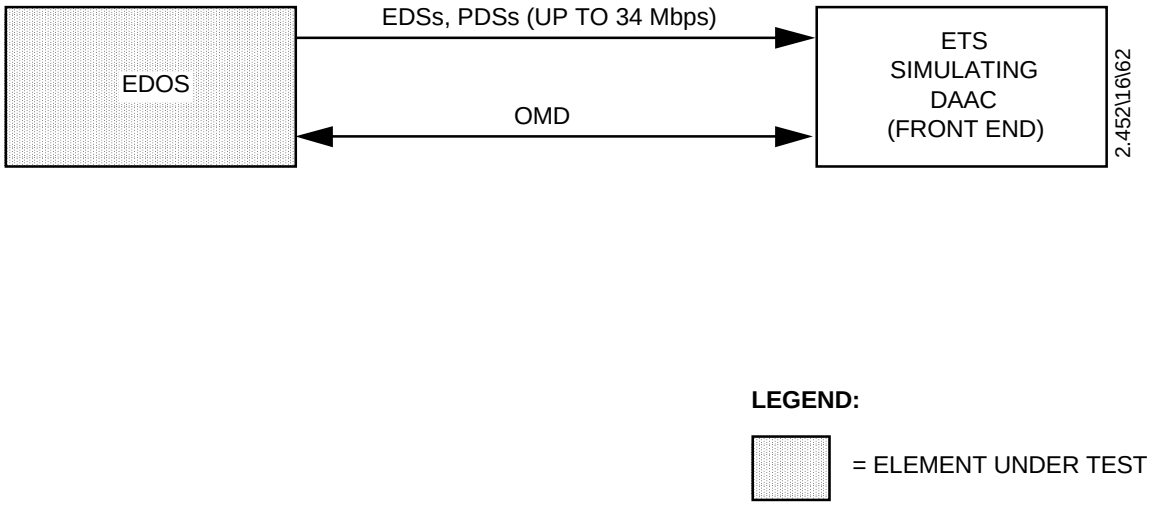

Figure 3-3. DAAC Front-End Simulation

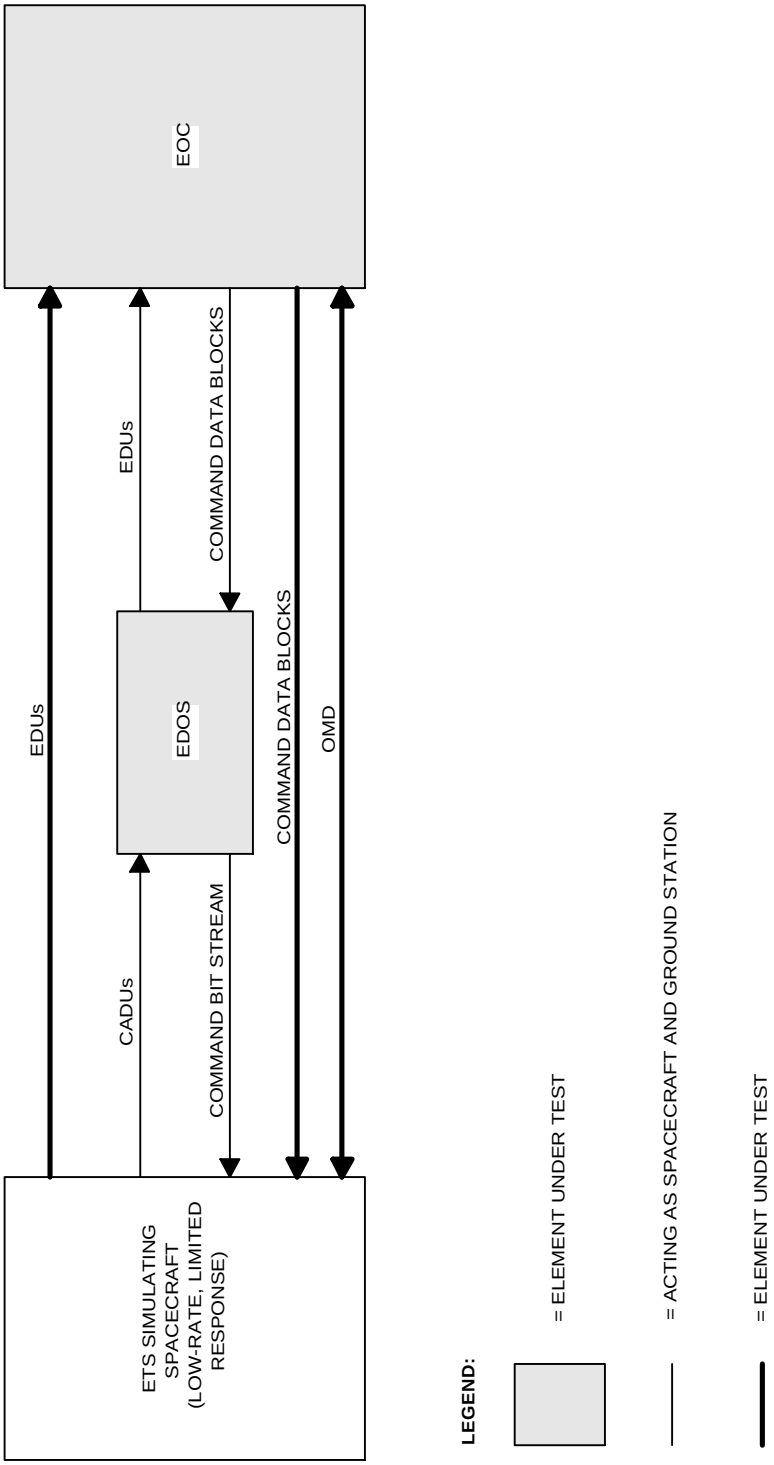

Figure 3-4. Spacecraft and Ground Station Simulation

3.5.10 ETS shall provide the capability to receive DSN command bit streams contained in 4800-bit blocks.

3.5.11 ETS shall provide the capability to generate the GN return-link CADUs in the form of 4800-bit blocks.

3.5.12 ETS shall provide the capability to receive GN command bit streams contained in 4800-bit blocks.

3.5.13 ETS shall provide the capability to generate the WOTS return-link CADUs in the form of 4800-bit blocks.

3.5.14 ETS shall provide the capability to receive WOTS command bit streams contained in 4800-bit blocks.

3.5.15 ETS shall provide the capability to simulate rate-buffered data files using ETS-generated test data.

3.5.16 ETS shall provide the capability to receive spacecraft commands in the form of command data blocks from EOC through EBnet.

3.5.17 ETS shall provide the capability of transmitting telemetry in the form of EDUs through EBnet.

3.5.18 ETS shall provide the capability of setting telemetry end-item verifiers on receipt of valid commands, if defined in the EOS AM-1 Project spacecraft database.

3.5.19 ETS shall provide the capability to set telemetry header and data fields.

3.5.20 ETS shall provide the operator the real-time capability of enabling/disabling any element of the command validation process, entering spacecraft commands, controlling transmission of telemetry, and inducing a limited number of telemetry errors.

3.5.21 ETS shall provide a transportable spacecraft simulation capability.

3.6 ETS Requirements for Spacecraft Interface With EOC

This subsection contains requirements for ETS acting as EDOS for both the forward-link and low-rate return-link interfaces with the EOC. Figure 3-5 depicts the data flow among the spacecraft checkout system integration and test (SCS I&T) equipment, ETS, and the EOC. ETS will perform the same functions for the spacecraft simulator (SSIM) interface to the EOC.

3.6.1 ETS shall provide the capability to receive low-rate spacecraft data.

3.6.2 ETS shall provide the capability to perform Reed-Solomon decoding on received low-rate spacecraft data.

3.6.3 ETS shall provide the capability to construct packets from the low-rate return-link data received through EBnet and to transmit the data in the form of EDUs to the EOC through EBnet.

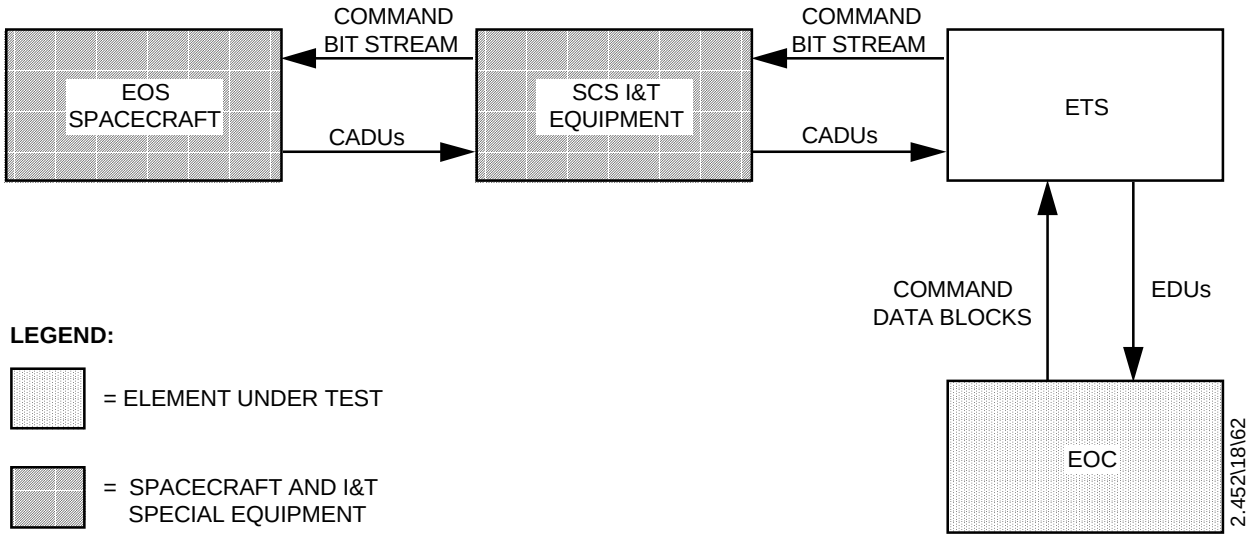

Figure 3-5. EDOS Low-Rate Simulation

3.6.4 ETS shall provide the capability to extract CLCWs from thelow-rate return-link data received through EBnet and to transmit the data in the form of EDUs to the EOC through EBnet.

3.6.5 ETS shall provide the capability to receive command data blocks from the EOC and transmit these as command bit streams.

3.6.6 ETS shall provide the capability to verify the data and protocol formats of received low-rate forward- and return-link data for communications interface checks.

3.6.7 ETS shall provide the capability to provide quality and accounting data for received low-rate forward- and return-link data.

Section 4. ETS Facility and Interface Requirements

This section contains facility requirements and interface requirements.

ETS shall use the operational interface requirements documents (IRDs), as defined by the various elements, for the data flows within the scope of ETS test and simulation requirements.

4.1 ETS Facility Requirements

4.1.1 ETS equipment shall operate in operational ambient temperature to range from 50 degrees to 80 degrees Fahrenheit and ambient humidity to range from 20 percent to 70 percent (noncondensing).

4.1.2 The ETS equipment shall require a physical space of no more than 10 feet by 20 feet.

4.1.3 The ETS equipment shall require approximately 20 kilowatts (±10 percent) for power.

4.2 ETS Simulating Spacecraft/TGT Interface to EDOS

4.2.1 The ETS when acting as a spacecraft shall comply with the interface formats and protocols specified in the TGT to EDOS interface document.

4.3 ETS Simulating DSN Interface to EDOS Through EBnet

4.3.1 The ETS when acting as the DSN shall comply with the interface formats and protocols specified in the DSN to EDOS interface document.

4.4 ETS Simulating GN Interface to EDOS Through EBnet

4.4.1 The ETS when acting as the GN shall comply with the interface formats and protocols specified in the GN to EDOS interface document.

4.5 ETS Simulating WOTS Interface to EDOS Through EBnet

4.5.1 The ETS when acting as the WOTS shall comply with the interface formats and protocols specified in the WOTS to EDOS interface document.

4.6 ETS Simulating EDOS Interface to EOC

4.6.1 The ETS interface with EOC shall comply with the interface formats and protocols specified in the EOC to EDOS interface document.

4.7 ETS Supporting Interface Between EOC and SCITF/SSIM

4.7.1 The ETS interface with the EOS AM-1 spacecraft integration and test facility (SCITF) shall be the same as specified for the spacecraft to EBnet interface.

4.7.2 The ETS interface with the EOS AM-1 SSIM shall be the same as the ETS interface with the EOS AM-1 SCITF.

4.8 ETS Simulating Interface Between EDOS and DAAC

4.8.1 The ETS interface with EDOS when ETS is simulating a DAAC shall comply with the interface formats and protocols specified in the EDOS to EGS interface requirements document.

4.8.2 The ETS interface with a DAAC when ETS is simulating EDOS transmission of data sets and OMD shall comply with the interface formats and protocols specified in the EDOS to EGS interface requirements document.

4.9 ETS-EBnet Interface Requirements

4.9.1 The ETS interface with EBnet shall comply with the interface formats and protocols specified in the EBnet interface requirements document.

Section 5. ETS Performance Requirements

This section contains the ETS performance requirements.

5.1 ETS System-Level Performance Requirements

This subsection contains the ETS system-level performance requirements.

5.1.1 ETS hardware that is configured for actual testing shall have a mean-time-to-failure greater than 396 hours.

5.1.2 ETS hardware that is configured for actual testing shall have an availability greater than 0.98.

5.1.3 ETS shall provide the capability to generate and transmit up to 512 unique APIDs.

5.1.4 ETS shall provide the capability to generate and transmit up to 31 unique VCDU-IDs.

5.1.5 ETS shall provide the capability to issue system configuration and test status reports on a periodic basis, in selectable multiples of 1 minute.

5.1.6 ETS shall update status, data quality, and accounting information once every 10 seconds, at a minimum.

5.1.7 ETS shall acknowledge a request from a local user within 2 seconds of its entry.

5.1.8 ETS shall start the execution of a local user request within 5 seconds of its entry.

5.1.9 ETS shall be ready for operational use within 20 minutes of power on.

5.1.10 ETS shall provide the capability to store high-rate test data during a testing session up to 25 gigabytes (GB).

5.1.11 ETS shall provide the capability to store low-rate data during a testing session up to 16 megabytes (MB).

5.2 ETS Performance Requirements for Simulating High-Rate TGT Return Link

This subsection contains the performance requirements for ETS acting as the TGT during tests.

5.2.1 ETS shall provide the capability to generate and transmit up to two TGT return-link data streams, including clock, in the form of CADUs, each at rates up to 150 megabits per second (Mbps).

5.3 ETS Performance Requirements for Simulating EDOS Output

5.3.1 ETS shall provide the capability to generate and transmit PDSs to a single destination through EBnet at a rate up to 34 Mbps.

5.3.2 ETS shall provide the capability to generate and transmit EDSs to a single destination through EBnet at a rate up to 34 Mbps.

5.3.3 ETS shall provide the capability to generate and transmit a data set of up to 25 GB in size that spans multiple TDRSS sessions.

5.4 ETS Performance Requirements for Simulating DAAC Front End

This subsection contains the performance requirements for ETS acting as a DAAC during tests.

5.4.1 ETS shall provide the capability to receive PDSs through EBnet from a single source at rates up to 34 Mbps.

5.4.2 ETS shall provide the capability to receive EDSs through EBnet from a single source at rates up to 34 Mbps.

5.4.3 ETS shall provide the capability to receive, store, and verify a data set of up to 12 GB in size.

5.5 ETS Performance Requirements for Simulating TGT and Contingency Mode

This subsection contains performance requirements for ETS acting in one of two modes:

- As the spacecraft and a ground station (TGT, DSN, GN or WOTS)
- As the spacecraft, a ground station, and EDOS

5.5.1 ETS shall provide the capability to generate and transmit CADUs at a rate of 256 kilobits per second (kbps).

5.5.2 ETS shall provide the capability to generate and transmit CADUs at a rate of 16 kbps.

5.5.3 ETS shall provide the capability to generate and transmit CADUs at a rate of 1 kbps.

5.5.4 ETS shall provide the capability to receive command bit streams at a rate of 10 kbps.

5.5.5 ETS shall provide the capability to receive command bit streams at a rate of 1 kbps.

5.5.6 ETS shall provide the capability to receive command bit streams at a rate of 125 bps.

5.5.7 ETS shall provide the capability to generate and transmit the DSN return-link data in the form of 4800-bit blocks at 512 kbps.

5.5.8 ETS shall provide the capability to generate and transmit the DSN return-link data in the form of 4800-bit blocks at 16 kbps.

5.5.9 ETS shall provide the capability to receive DSN forward-link data in the form of 4800-bit blocks at 2 kbps.

5.5.10 ETS shall provide the capability to generate and transmit the GN return-link data in the form of 4800-bit blocks at 512 kbps.

5.5.11 ETS shall provide the capability to generate and transmit the GN return-link data in the form of 4800-bit blocks at 16 kbps.

5.5.12 ETS shall provide the capability to receive GN forward-link data in the form of 4800-bit blocks at 2 kbps.

5.5.13 ETS shall provide the capability to generate and transmit the WOTS return-link data in the form of 4800-bit blocks at 512 kbps.

5.5.14 ETS shall provide the capability to generate and transmit the WOTS return-link data in the form of 4800-bit blocks at 16 kbps.

5.5.15 ETS shall provide the capability to receive WOTS forward-link data in the form of 4800-bit blocks at 2 kbps.

5.5.16 ETS shall provide the capability to multiplex up to 31 VCDU-IDs for one spacecraft identifier (SCID) in the same return-link physical channel.

5.5.17 ETS shall be capable of generating two simultaneous low-rate S-band data streams, of which the maximum rate for one is 16 kbps and the other is 512 kbps.

5.5.18 ETS shall provide the capability to generate and transmit a rate-buffered data file through EBnet at rates up to 1.1 Mbps.

5.5.19 ETS shall provide the capability to generate and transmit up to two streams of telemetry in the form of EDUs at rates up to 16 kbps.

5.5.20 ETS shall provide the capability to transmit, through EBnet, CLCWs as EDUs at rates up to 1 kbps.

5.5.21 ETS shall provide the capability to receive, through EBnet, command data blocks from EOC at rates up to 10 kbps.

5.6 ETS Performance Requirements for Spacecraft Interface With EOC

This subsection contains performance requirements for ETS acting as EDOS for both the forward-link and the low-rate return-link interfaces with the EOC.

5.6.1 ETS shall provide the capability to perform frame synchronization on received spacecraft data, through EBnet, at rates up to 512 kbps.

5.6.2 ETS shall provide the capability to perform Reed-Solomon decoding on received spacecraft data, through EBnet, at rates up to 512 kbps.

5.6.3 ETS shall provide the capability to receive, through EBnet, CADUs at a rate of 512 kbps.

5.6.4 ETS shall provide the capability to receive, through EBnet, CADUs at a rate of 256 kbps.

5.6.5 ETS shall provide the capability to receive, through EBnet, CADUs at a rate of 16 kbps.

5.6.6 ETS shall provide the capability to receive, through EBnet, CADUs at a rate of 1 kbps.

5.6.7 ETS shall provide the capability, through EBnet, to construct packets from received low-rate return-link data and to transmit the data in the form of EDUs to the EOC at rates up to 512 kbps.

5.6.8 ETS shall provide the capability, through EBnet, to extract CLCWs from received low-rate return-link data and to transmit the data in the form of EDUs to the EOC at rates up to 1 kbps.

5.6.9 ETS shall provide the capability, through EBnet, to receive command data blocks from the EOC and transmit as command bit streams at a rate of 10 kbps.

5.6.10 ETS shall provide the capability, through EBnet, to receive command data blocks from the EOC and transmit as command bit streams at a rate of 1 kbps.

5.6.11 ETS shall provide the capability, through EBnet, to receive command data blocks from the EOC and transmit as command bit streams at a rate of 125 bps.

5.6.12 ETS shall provide the capability, through EBnet, to receive command data blocks from the EOC and transmit as command bit streams at a rate of 2 kbps.

Appendix A. ETS Requirements/Source Traceability Matrix

The following traceability matrix provides a cross reference between the ETS F&PR requirement numbers and the ESDIS Project Level 2 Requirements, Volume 3 (Reference 5), the source document. The matrix is in requirement number order in the following format:

- Req No.—The ETS F&PR requirement number
- Requirement Description—The textual representation of this requirement as written in the ETS F&PR document
- Source Req #—The applicable requirement number(s) contained in the source document used to derive this ETS requirement (When the ETS F&PR was being revised, requirement numbering had not been established in the source document. When those requirement numbers are available, the ETS F&PR will be updated to include that information.)

Req No.	Requirement Description	Source Req #
3.1.1	ETS shall conform to the CCSDS Recommendations for Space Data System Standards applicable to the ESDIS Project as specified in this document.	V3-3001
3.1.2	ETS shall provide the capability to accept and distribute test data by electronic transmission and by physical media.	V3-3002
3.1.3	ETS shall provide sensitivity level 1 protection as specified in the MO&DSD *Automated Information System (AIS) Security Policy*.	V3-3003
3.1.4	ETS shall comply with the *NASA Communications (Nascom) Access Protection Policy and Guidelines*.	V3-3003
3.1.5	ETS shall provide the capability to generate flags in all headers.	V3-3004
3.1.6	ETS shall provide the capability to read and interpret flags in all headers.	V3-3005
3.1.7	ETS shall provide the capability to validate all headers of received data.	V3-3006
3.1.8	ETS shall provide the capability to generate static test data, dynamic test data, or a combination of both.	V3-3007
3.1.9	ETS shall provide the capability to generate CCSDS test data with predefined errors in selected header and data fields.	V3-3008
3.1.10	ETS shall provide the capability to create time and data gaps in the ETS-generated test data.	V3-3009
3.1.11	ETS shall provide the capability to insert fill data into ETS-generated test data.	V3-3010
3.1.12	ETS shall provide the capability to monitor and display ETS system configuration and test status.	V3-3011
3.1.13	ETS shall be capable of providing dumps of received or generated test data on electronic and physical media.	V3-3012

Req No.	Requirement Description	Source Req #
3.1.14	ETS shall provide the capability to generate unique APIDs or VCDU identifiers (VCDU-IDs) for a testing session.	V3-3013
3.1.15	ETS shall use the universal time coordinated (UTC) format for time-of-day-related data, as required by the test.	V3-3014
3.1.16	ETS shall provide the capability to log operator dialog to maintain an operations audit trail, as specified in the test script.	V3-3015
3.1.17	ETS shall provide tools to support data analysis.	V3-3016
3.1.18	ETS shall provide the capability to receive, store, and utilize the AM-1 spacecraft database.	V3-3017
3.1.19	ETS shall provide the capability to insert errors into data from spacecraft- and instrument-generated tapes.	V3-3018
3.1.20	ETS shall provide the capability to generate production data sets (PDSs) and expedited data sets (EDSs) from spacecraft- and instrument-generated tapes.	V3-3019
3.1.21	ETS shall provide the capability to generate and transmit OMD through EBnet.	V3-3020
3.1.22	ETS shall provide the capability to receive OMD through EBnet.	V3-3021
3.1.23	ETS shall provide the capability to store transmitted and received test data as directed by operator control.	V3-3022
3.1.24	ETS shall provide the capability to encapsulate user-provided AM-1 science packets and raw sensor data in CCSDS channel access data units (CADUs) for transmission.	V3-3018
3.2.1	ETS shall provide the capability to generate and transmit a TGT high-rate return link in the form of channel access data units (CADUs).	V3-3023
3.2.2	ETS shall provide the capability to generate and transmit the TGT return-link clock.	V3-3024
3.3.1	ETS shall provide the capability to generate and transmit PDSs using ETS-generated test data.	V3-3025
3.3.2	ETS shall provide the capability to generate and transmit EDSs using ETS-generated test data.	V3-3026
3.3.3	ETS shall provide the capability to generate the summary status, quality, and accounting data reporting of EDOS services for processing of ETS-generated data.	V3-3027
3.4.1	ETS shall provide the capability to receive PDSs through EBnet.	V3-3028
3.4.2	ETS shall provide the capability to receive EDSs through EBnet.	V3-3029
3.4.3	ETS shall provide the capability to store received EDSs and PDSs.	V3-3030
3.5.1	ETS shall provide the capability to simulate EOS AM-1 low-rate spacecraft return-link data.	V3-3031
3.5.2	ETS shall provide the capability to generate simulated time codes in the packet headers.	V3-3032
3.5.3	ETS shall provide the capability to generate user-specified VCDU packet data values.	V3-3033
3.5.4	ETS shall provide the capability to receive EOS spacecraft command bit stream.	V3-3034

Req No.	Requirement Description	Source Req #
3.5.5	ETS shall provide the capability to verify the received EOS spacecraft commands by updating the command link control word (CLCW) based on the receipt of a valid command.	V3-3035
3.5.6	ETS shall provide the capability of transmitting the CLCW in the form of EDUs to EOC through EBnet.	V3-3036
3.5.7	ETS shall provide the capability to perform the COP-1 protocol for commands over the low-rate return link.	V3-3037
3.5.8	ETS shall provide the capability to respond to a limited number of EOS spacecraft commands.	V3-3038
3.5.9	ETS shall provide the capability to generate the DSN return-link CADUs in the form of 4800-bit blocks.	V3-3039
3.5.10	ETS shall provide the capability to receive DSN command bit streams contained in 4800-bit blocks.	V3-3040
3.5.11	ETS shall provide the capability to generate the GN return-link CADUs in the form of 4800-bit blocks.	V3-3041
3.5.12	ETS shall provide the capability to receive GN command bit streams contained in 4800-bit blocks.	V3-3042
3.5.13	ETS shall provide the capability to generate the WOTS return-link CADUs in the form of 4800-bit blocks.	V3-3043
3.5.14	ETS shall provide the capability to receive WOTS command bit streams contained in 4800-bit blocks.	V3-3044
3.5.15	ETS shall provide the capability to simulate rate-buffered data files using ETS-generated test data.	V3-3045
3.5.16	ETS shall provide the capability of receiving spacecraft commands in the form of command data blocks from EOC through EBnet.	V3-3046
3.5.17	ETS shall provide the capability of transmitting telemetry in the form of EDOS data units (EDUs) through EBnet.	V3-3047
3.5.18	ETS shall provide the capability of setting telemetry end-item verifiers on receipt of valid commands, if defined in the EOS AM-1 Project spacecraft database.	V3-3048
3.5.19	ETS shall provide the capability to set telemetry header and data fields.	V3-3049
3.5.20	ETS shall provide the operator the real-time capability of enabling/disabling any element of the command validation process, entering spacecraft commands, controlling transmission of telemetry, and including a limited number of telemetry errors.	V3-3050
3.5.21	ETS shall provide a transportable spacecraft simulation capability.	V3-3051
3.6.1	ETS shall provide the capability to receive low-rate spacecraft data.	V3-3052
3.6.2	ETS shall provide the capability to perform Reed-Solomon decoding on received low-rate spacecraft data.	V3-3053
3.6.3	ETS shall provide the capability to construct packets from the low-rate return-link data received through EBnet and to transmit the data in the form of EDUs to the EOC through EBnet.	V3-3054

Req No.	Requirement Description	Source Req #
3.6.4	ETS shall provide the capability to extract CLCWs from the low-rate return-link data received through EBnet and to transmit the data in the form of EDUs to the EOC through EBnet.	V3-3055
3.6.5	ETS shall provide the capability to receive command data blocks from the EOC and transmit as command bit streams.	V3-3056
3.6.6	ETS shall provide the capability to verify the data and protocol formats of received low-rate forward- and return-link data for communications interface checks.	V3-3057
3.6.7	ETS shall provide the capability to provide quality and accounting data for received low-rate forward- and return-link data.	V3-3058
4.1.1	ETS equipment shall operate in operational ambient temperature to range from 50 degrees to 80 degrees Fahrenheit and ambient humidity to range from 20 percent to 70 percent (noncondensing).	Derived
4.1.2	TheETS equipment shall require a physical space of no more than 10 feet by 20 feet.	Derived
4.1.3	The ETS equipment shall require approximately 20 kilowatts (±10 percent) for power.	Derived
4.2.1	The ETS when acting as a spacecraft shall comply with the interface formats and protocols specified in the TGT to EDOS interface document.	Derived
4.3.1	The ETS when acting as the DSN shall comply with the interface formats and protocols specified in the DSN to EDOS interface document.	Derived
4.4.1	The ETS when acting as the GN shall comply with the interface formats and protocols specified in the GN to EDOS interface document.	Derived
4.5.1	The ETS when acting as the WOTS shall comply with the interface formats and protocols specified in the WOTS to EDOS interface document.	Derived
4.6.1	The ETS interface with EOC shall comply with the interface formats and protocols specified in the EOC to EDOS interface document.	Derived
4.7.1	The ETS interface with the EOS AM-1 spacecraft integration and test facility (SCITF) shall be the same as specified for the spacecraft to EBnet interface.	Derived
4.7.2	The ETS interface with the EOS AM-1 SSIM shall be the same as the ETS interface with the EOS AM-1 SCITF.	Derived
4.8.1	The ETS interface with the EDOS when ETS is simulating a DAAC shall comply with the interface formats and protocols specified in the EDOS to EGS interface requirements document.	Derived
4.8.2	The ETS interface with a DAAC when ETS is simulating EDOS transmission of data sets and OMD shall comply with the interface formats and protocols specified in the EDOS to EGS interface requirements document.	Derived
4.9.1	The ETS interface with EBnet shall comply with the interface formats and protocols specified in the EBnet interface requirements document.	Derived

Req No.	Requirement Description	Source Req #
5.1.1	ETS hardware that is configured for actual testing shall have a mean-time-to-failure (MTTF) greater than 396 hours.	V3-3059
5.1.2	ETS hardware that is configured for actual testing shall have an availability greater than 0.98.	V3-3060
5.1.3	ETS shall provide the capability to generate and transmit up to 512 unique APIDs.	V3-3061
5.1.4	ETS shall provide the capability to generate and transmit up to 31 unique VCDU-IDs.	V3-3062
5.1.5	ETS shall provide the capability to issue system configuration and test status reports on a periodic basis, in selectable multiples of 1 minute.	V3-3063
5.1.6	ETS shall update status, data quality, and accounting information once every 10 seconds, at a minimum.	V3-3064
5.1.7	ETS shall acknowledge a request from a local user within 2 seconds of its entry.	V3-3065
5.1.8	ETS shall start the execution of a local user request within 5 seconds of its entry.	V3-3066
5.1.9	ETS shall be ready for operational use within 20 minutes of power on.	V3-3067
5.1.10	ETS shall provide the capability to store high-rate data during a testing session up to 25 GB.	V3-3068
5.1.11	ETS shall provide the capability to store low-rate data during a testing session up to 16 MB.	V3-3069
5.2.1	ETS shall provide the capability to generate and transmit up to two TGT return-link data streams, including clock, in the form of CADUs, each at rates up to 150 megabits-per-second (Mbps).	V3-3070
5.3.1	ETS shall provide the capability to generate and transmit PDSs to a single destination through EBnet at a rate up to 34 Mbps.	V3-3071
5.3.2	ETS shall provide the capability to generate and transmit EDSs to a single destination through EBnet at a rate up to 34 Mbps.	V3-3072
5.3.3	ETS shall provide the capability to generate and transmit a data set of up to 25 GB in size that spans multiple TDRSS sessions.	V3-3073
5.4.1	ETS shall provide the capability to receive PDSs through EBnet from a single source at rates up to 34 Mbps.	V3-3074
5.4.2	ETS shall provide the capability to receive EDSs through EBnet from a single source at rates up to 34 Mbps.	V3-3075
5.4.3	ETS shall provide the capability to receive, store, and verify a data set of up to 12 GB in size.	V3-3028, V3-3029, V3-3030
5.5.1	ETS shall provide the capability to generate and transmit CADUs at a rate of 256 kbps.	V3-3077
5.5.2	ETS shall provide the capability to generate and transmit CADUs at a rate of 16 kbps.	V3-3077
5.5.3	ETS shall provide the capability to generate and transmit CADUs at a rate of 1 kbps.	V3-3077
5.5.4	ETS shall provide the capability to receive command bit streams at a rate of 10 kbps.	V3-3078

Req No.	Requirement Description	Source Req #
5.5.5	ETS shall provide the capability to receive command bit streams at a rate of 1 kbps.	V3-3078
5.5.6	ETS shall provide the capability to receive command bit streams at a rate of 125 bps.	V3-3078
5.5.7	ETS shall provide the capability to generate and transmit the DSN return-link data in the form of 4800-bit blocks at 512 kbps.	V3-3079
5.5.8	ETS shall provide the capability to generate and transmit the DSN return-link data in the form of 4800-bit blocks at 16 kbps.	V3-3079
5.5.9	ETS shall provide the capability to receive DSN forward-link data in the form of 4800-bit blocks at 2 kbps.	V3-3080
5.5.10	ETS shall provide the capability to generate and transmit the GN return-link data in the form of 4800-bit blocks at 512 kbps.	V3-3081
5.5.11	ETS shall provide the capability to generate and transmit the GN return-link data in the form of 4800-bit blocks at 16 kbps.	V3-3081
5.5.12	ETS shall provide the capability to receive GN forward-link data in the form of 4800-bit blocks at 2 kbps.	V3-3082
5.5.13	ETS shall provide the capability to generate and transmit the WOTS return-link data in the form of 4800-bit blocks at 512 kbps.	V3-3083
5.5.14	ETS shall provide the capability to generate and transmit the WOTS return-link data in the form of 4800-bit blocks at 16 kbps.	V3-3083
5.5.15	ETS shall provide the capability to receive WOTS forward-link data in the form of 4800-bit blocks at 2 kbps.	V3-3084
5.5.16	ETS shall provide the capability to multiplex up to 31 VCDU-IDs for one spacecraft identifier (SCID) in the same return-link physical channel.	V3-3085
5.5.17	ETS shall be capable of generating two simultaneous low-rate S-band streams, of which the maximum rate for one is 16 kbps and the other is 512 kbps.	V3-3086
5.5.18	ETS shall provide the capability, through EBnet, to generate and transmit a rate-buffered data file at rates up to 1.1 Mbps.	V3-3087
5.5.19	ETS shall provide the capability, through EBnet, to generate and transmit up to two streams of telemetry in the form of EDUs at rates up to 16 kbps.	V3-3088
5.5.20	ETS shall provide the capability to transmit, through EBnet, CLCWs as EDUs at rates up to 1 kbps.	V3-3089
5.5.21	ETS shall provide the capability to receive, through EBnet, command data blocks from EOC at rates up to 10 kbps.	V3-3090
5.6.1	ETS shall provide the capability to perform frame synchronization on received spacecraft data, through EBnet, at rates up to 512 kbps.	V3-3091
5.6.2	ETS shall provide the capability to perform Reed-Solomon decoding on received spacecraft data, through EBnet, at rates up to 512 kbps.	V3-3092
5.6.3	ETS shall provide the capability to receive, through EBnet, CADUs at a rate of 512 kbps.	V3-3093
5.6.4	ETS shall provide the capability to receive, through EBnet, CADUs at a rate of 256 kbps.	V3-3093

Req No.	Requirement Description	Source Req #
5.6.5	ETS shall provide the capability to receive, through EBnet, CADUs at a rate of 16 kbps.	V3-3093
5.6.6	ETS shall provide the capability to receive, through EBnet, CADUs at a rate of 1 kbps.	V3-3093
5.6.7	ETS shall provide the capability, through EBnet, to construct packets from received low-rate return-link data and to transmit the data in the form of EDUs to the EOC at rates up to 512 kbps.	V3-3094
5.6.8	ETS shall provide the capability, through EBnet, to extract CLCWs from received low-rate return-link data and to transmit the data in the form of EDUs to the EOC at rates up to 1 kbps.	V3-3095
5.6.9	ETS shall provide the capability, through EBnet, to receive command data blocks from the EOC and transmit as command bit streams at a rate of 10 kbps.	V3-3096
5.6.10	ETS shall provide the capability, through EBnet, to receive command data blocks from the EOC and transmit as command bit streams at a rate of 1 kbps.	V3-3096
5.6.11	ETS shall provide the capability, through EBnet, to receive command data blocks from the EOC and transmit as command bit streams at a rate of 125 bps.	V3-3096
5.6.12	ETS shall provide the capability, through EBnet, to receive command data blocks from the EOC and transmit as command bit streams at a rate of 2 kbps.	V3-3096

Abbreviations and Acronyms

AM-1	morning equatorial crossing spacecraft-1
APID	application process identifier
BER	bit error rate
bps	bits per second
CADU	channel access data unit
CCSDS	Consultative Committee for Space Data Systems
CLCW	command link control word
CLTU	command link transmission unit
COP	Command Operation Procedures
CVCDU	coded virtual channel data unit
DAAC	Distributed Active Archive Center
DCN	Document Change Notice
DSN	Deep Space Network
EBnet	EOSDIS Backbone network [formerly EOS Communications (Ecom)]
EDOS	EOS Data and Operations System
EDS	expedited data set
EDU	EDOS data unit
EOC	EOS Operations Center
EOS	Earth Observing System
EOSDIS	EOS Data and Information System
ESDIS	Earth Science Data and Information System
ETS	EOSDIS Test System
F&PR	functional and performance requirements
GB	gigabyte
GN	Ground Network
GOSIP	Government Open Systems Interconnection Profile
GSFC	Goddard Space Flight Center

IP	Internet Protocol
IRD	interface requirements document
ISO	International Standards Organization
IV&V	independent verification and validation
kbps	kilobits (thousands of bits) per second
LRU	line-replaceable unit
Mbps	megabits (millions of bits) per second
MO&DSD	Mission Operations and Data Systems Directorate
MTBF	mean time between failures
MTR	mean time to restore
MTTF	mean time to failure
MTTR	mean time to repair
NASA	National Aeronautics and Space Administration
Nascom	NASA Communications
OMD	operations management data
OSI	Open Systems Interconnection
PDS	production data set
PDU	protocol data unit
RLPF	return-link processing function
SCID	spacecraft identifier
SCITF	Spacecraft Integration and Test Facility
SCS I&T	spacecraft checkout system integration and test
SN	Space Network
SRR	system requirements review
SSIM	EOS AM-1 spacecraft simulator
TBD	to be determined
TBR	to be resolved
TDRS	Tracking and Data Relay Satellite
TDRSS	Tracking and Data Relay Satellite System

TGT	TDRSS Ground Terminal
TSS	TDRS service session
UTC	universal time coordinated
VCDU	virtual channel data unit
VCDU-ID	VCDU identifier
WOTS	Wallops Orbital Tracking Station

Glossary

accounting data:	Information that describes in terms of volumes and quality the processing, inputs, and outputs of an ETS testing session. Accounting data comprises mission data identifiers, including time references; processing identifiers; and data quality and quantity information obtained and calculated. For examples of accounting data tracked, refer to the *EDOS Functional and Performance Specification* (Reference 6), Section 5.1.3, RLPF Functional Requirements.
availability:	The probability that a given piece of equipment, function, or system as a whole is ready for operational use at the time it is needed. It is calculated as the ratio of uptime for the element, divided by the sum of its uptime and its downtime. Downtime includes time allotted for corrective maintenance (i.e., removing and replacing the failed item), preventive maintenance (i.e., deferred and scheduled maintenance activities), and administrative and logistic delay time. A = MTTF/(MTTF + MTTR)
CCSDS services:	Data packaging and transmission services described in the CCSDS Recommendations for Space Data Systems Standards, as specified in Reference 1 and References 7 through 13.
command data block:	Forward-link CCSDS telecommand command link transmission unit(s) (CLTUs) preceded by an EDOS ground message header sent from EOC through EDOS for forwarding to the spacecraft.
construction record:	Data indicating the contents and quality of the associated PDS or EDS.
Deep Space Network (DSN):	Facilities and equipment, including the 26-meter subnetwork, at the following NASA sites: Goldstone, Madrid, and Canberra.
dynamic data:	Data patterns that change as a predictable and repeatable response to some received input.
EDOS data unit (EDU):	A variable-length, delimited data unit whose structure and header information are specified by EDOS. The EDU consists of a service data unit concatenated with an EDOS service header.
EDOS service header:	A header generated by EDOS that contains data quality and accounting information and that is appended to each return-link service data unit.
electronic media:	Data transfer media such as communications networks, e-mail, or data lines, in contrast to physical media (hardcopy computer printout, removable disk, magnetic tape, and so forth).

expedited data processing:	Processing performed on return-link CCSDS packet data from a single TSS. This processing includes the following functions: • Sorting packets by SCID and APID or by SCID, APID, and secondary header quicklook flag • Forwarding time order packets • Identifying data gaps • Producing summary quality and accounting information • Creating an EDS from the resulting packets **NOTE**: As part of expedited processing, these data do not receive routine production data processing services, such as data merging, and redundant packet deletion. All these packets are retained for production data processing.
expedited data set (EDS):	The output of expedited data processing that is delivered to the DAAC. An EDS construction record is associated with the EDS.
forward-link data:	Data originating on the ground and passing through EDOS for transmission to a spacecraft.
frame synchronization:	A digital data handling procedure performed by a system that recognizes a fixed data pattern to determine the boundaries of a frame of data.
gap:	A simulated absence of data in a data stream, as indicated by a discontinuity in an incrementing data unit sequence number.
Ground Network:	Facilities and equipment at the following NASA sites: Mila, Bermuda, and Dakar.
high-rate data:	For ETS purposes, data at rates greater than or equal to 1.1 Mbps.
level-zero data:	Spacecraft or instrument data at full space-time resolution with space-to-ground communications artifacts removed.
line-replaceable unit (LRU):	The lowest hardware unit defined by the design as replaceable during in-situ system maintenance.
log (verb):	To store received or generated data for the purpose of history accounting, fault isolation, or system recovery.
low-rate data:	For ETS purposes, data at rates less than 1.1 Mbps.
mean time between failures (MTBF)	The expected amount of operating time between two successive failures.
mean time to failure (MTTF)	The expected amount of operating time between two successive failures, excluding downtime. MTTF = MTBF - MTR.

mean time to repair (MTTR)	The expected amount of operating and non-operating time needed to perform corrective maintenance of an item.
mean time to restore (MTR)	The expected amount of operating time needed to restore a system from a failed state to a nonfailed state.
mission data:	Spacecraft, instrument, and other data for a specific mission. Mission data includes spacecraft forward- and return-link data in raw and processed forms.
online:	Data retrievable almost immediately on request from local storage media (e.g., disk farm), as contrasted to archived data, which usually requires substantial retrieval time for access.
operating time	The period the system is expected to be actively performing its intended functions.
operations management:	The supervisory, control, and support activities needed to sustain operations at an acceptable level. For EDOS, this includes system processing control, operations and maintenance, testing, training, operations planning, security, sustaining engineering, library services, and MO&DSD service integration management.
operations management data (OMD):	A generic term to describe any data used to manage EDOS operations and its interfaces. Examples of OMD include control, reporting, service request, and operations planning data.
physical channel:	A space/ground transmission medium.
physical media:	Removable disk, magnetic tape, or actual hardcopy (such as a computer printout or a screen dump onto paper), as opposed to electronic media such as communications networks, e-mail, computer memory, or online disk storage.
playback data:	Data that is identified as having been recorded onboard a spacecraft for later transmission to the ground.
playback processing:	The processing performed on return-link data to remove communications artifacts that result from spacecraft onboard recording and the subsequent playback of mission data. Depending on the type of tape-recording system used onboard the spacecraft, the playback processing may include the detection and forward bit-ordering of bit-reversed CADUs, and reverse ordering of a sequence of VCDUs from the order in which the VCDUs were originally received by EDOS. Playback processing restores the as-recorded order to spacecraft tape-recorded data received by the frame synchronization function in reverse order. Playback data received in forward order are processed and stored as received.

predefined:	Known and planned for. In the case of ETS, the types of errors introduced into the data are known and user chosen; they are not random, unpredictable, or unexpected.
production data processing:	Processing performed on return-link CCSDS packet data, which includes the following functions: • Sort packets by SCID and APID • Forward time-order packets • Identify data gaps • Produce summary quality and accounting information • Create a PDS containing merged data from multiple Tracking and Data Relay Satellite (TDRS) service sessions (TSSs) • Identify and delete redundant packets between multiple TSSs
production data set (PDS):	A PDS consists of CCSDS packets from a single SCID/APID and a PDS construction record. A PDS is generated during production data processing and is delivered to the designated DAAC.
quality and accounting data:	Data that describes the results of EDOS mission data archive and data delivery services. Quality and accounting data includes mission data identifiers such as time references, EDOS processing identifiers, and the mission data quality and quantity information obtained from the EDOS processing.
rate-buffered data:	Mission return-link data that has been received by the EDOS from a single TSS for delivery at a rate different from the rate received.
real-time processing:	Real-time processing as defined by EDOS describes processing performed on mission data with minimized latency through EDOS.
reliability:	The probability that a system, a comprised element, or a given piece of equipment will operate within design parameters under stated conditions, for a specified interval.
return-link data:	Mission data originating on a spacecraft for transmission to the ground.
service access point:	The point at which services are provided by an entity to a user of the entity. Service access points can be internal or external to EDOS.
service data unit:	Any of the CCSDS standard data units associated with CCSDS standard services, including the following: CVCDU/VCDU, CCSDS Version 1 packet, ISO 8473 packet, bit stream, fixed length data unit, isochronous octets, link access control word, Version 1 transfer frame, telecommand transfer frame, CLCW, and CLTU.

service request:	A request message from a customer for a change in the EDOS services being provided to that customer.
Space Network (SN):	The combined space and ground segment elements supporting the TDRSS. The SN includes the TDRSs, the White Sands Complex, and the Network Control Center for TDRS scheduling and control.
source:	A ground service access point from which data is received.
static data:	Data that follows a fixed, predictable pattern over time.
status data:	Status data defines the characteristics of current system operations. Status data comprises configuration, performance, fault, data accounting, and security information.
test (verb):	To monitor an element's output and apply acceptance criteria against it.
test data:	Data used for testing and/or diagnostics.
test data set:	A data set comprising a test data set identifier, test data used, expected test results, and accounting data.
test report:	A report that documents the results of an ETS testing session.
test request message:	An OMD message to identify a specific planned test operation and to request resources and support for the test.
test results:	The evaluation of the testing performed. Test results include detailed specifics of detected errors as well as summary totals and various calculated measurements.
testing session:	ETS testing operations are organized into three phases: pretest preparation, real-time testing, and posttest analysis. The term *ETS testing session* refers collectively to all three phases, when executed in a contiguous block of time.
user data:	Test data provided to ETS by an ETS-external source.
verification:	The process of confirming by test or comparison to other operating systems that a configuration item or configuration item component can achieve its objectives.
virtual channels:	A CCSDS architectural concept whereby a single physical channel may be shared by different users by creating multiple, apparently parallel "virtual" paths through the physical channel. This is formally described in Reference 1.

virtual channel data unit (VCDU):	A fixed-length CCSDS Advanced Orbiting Systems data structure used bidirectionally for space/space or space/ground communications. A VCDU that includes forward error correction coding is referred to as a coded VCDU (CVCDU) and is implied by references to VCDUs, as specified in Reference 1.